CBM 齿轮泵
CBM GEAR PUMPS

德力液压 Deli®

简介 General Description

CBM 齿轮油泵采用高强度的压铸铝合金制成的前、后盖和粉末冶金泵体、高强度齿轮和轴，结构简单合理，且该齿轮泵具有体积小、重量轻、效率高、噪音低和寿命长等优点。适合用于扫雪车液压动力单元和各种小型的中高压液压系统。

The CBM gear pump consists of a gear pair,a housing, a front cover and a rear cover. The CBM Gear Pump features high mechanical and volumetric efficiency, low noise level as well as low weight/power ratio. It is widely used in the power units for snow plows and small displacement, medium pressure hydraulic systems.

型谱 Order Code

CBM－ D * *

12MPa	额定压力 Rated pressure
1.8～3.8mL/r	排量 Displacement

旋向 Direction

空白	顺时针 CW
F	逆时针 CCW

外形尺寸图 Outline Dimension

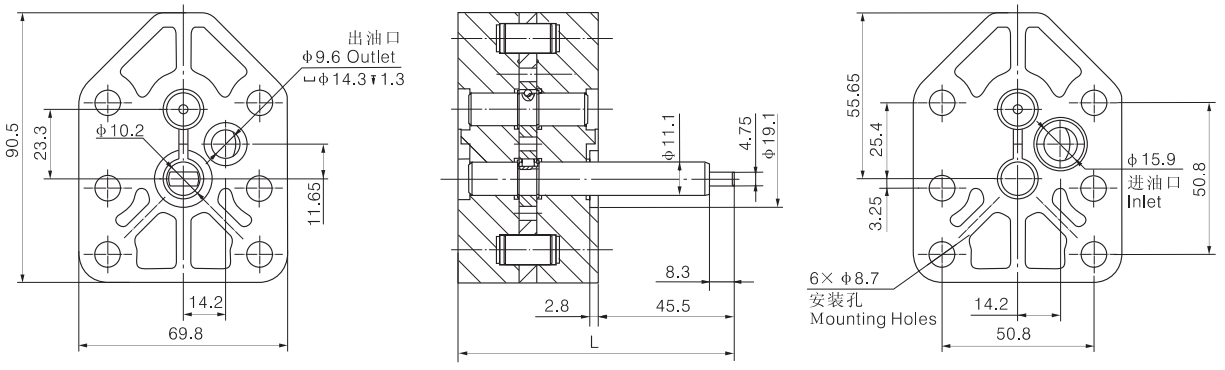

技术参数 Technical Data

Model 型 号	Displacement 排 量 mL/r (in³/r)	压力 pressure (MPa)			转速 Speed (RPM)		L(mm)	Efficiency 容积效率
		P1	P2	P3	额定 Rated (RPM)	最高 Max (RPM)		
CBM-D1.8F	1.8 (0.110)	12	15	17.5	2000	3000	92.5	75%
CBM-D2.8F	2.8 (0.171)						95.5	
CBM-D3.8F	3.8 (0.232)						98.5	